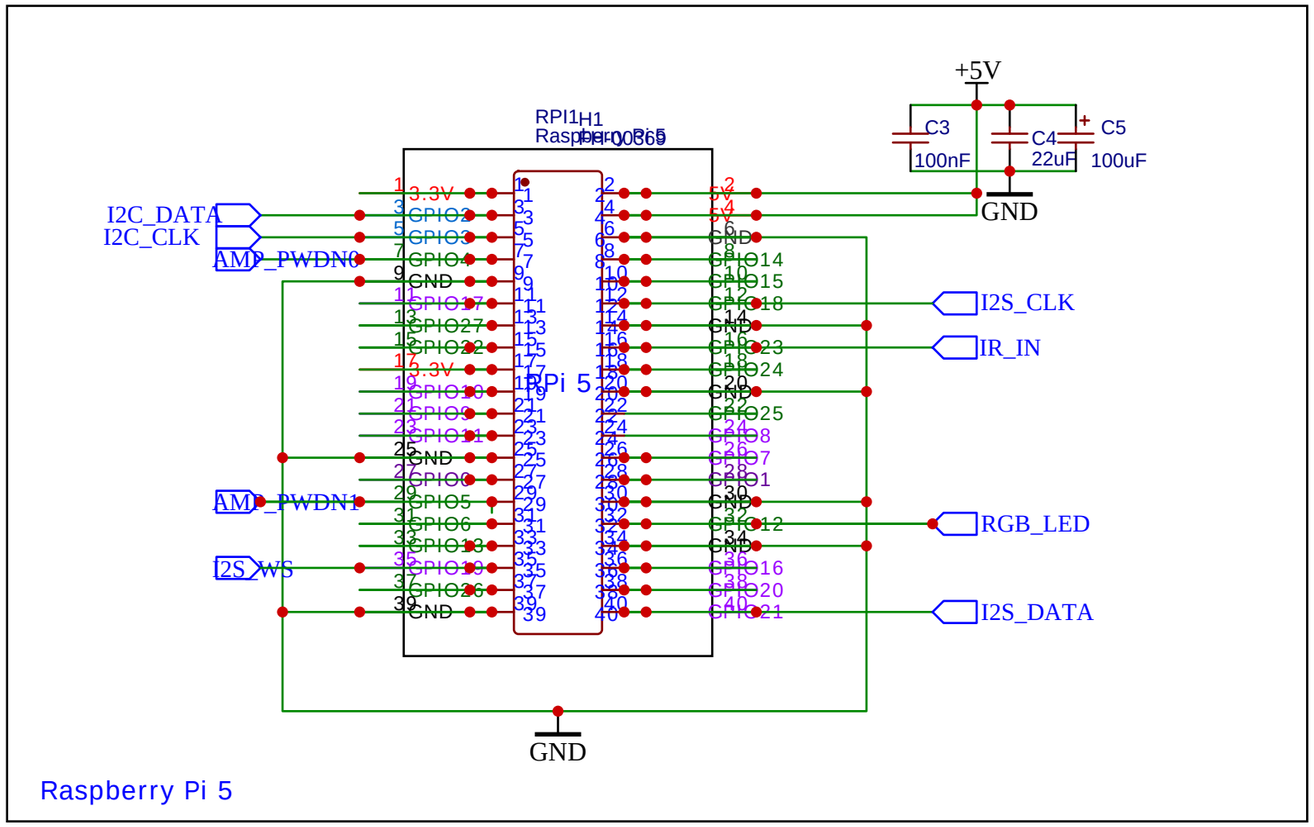


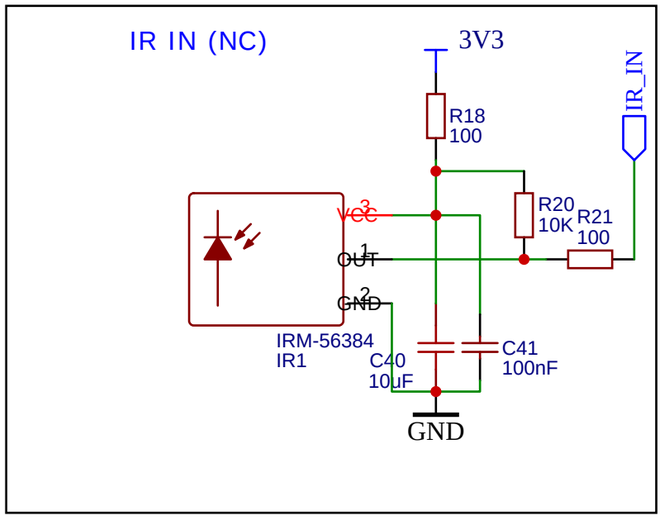


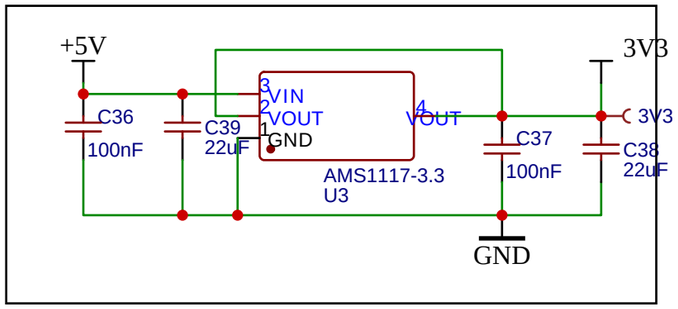


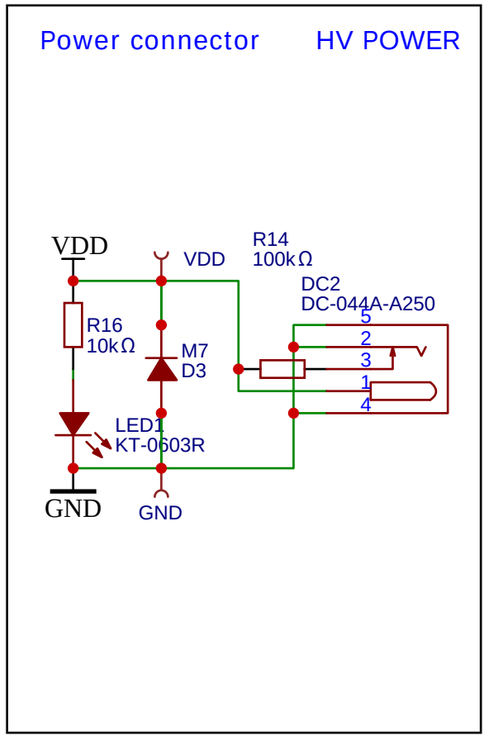


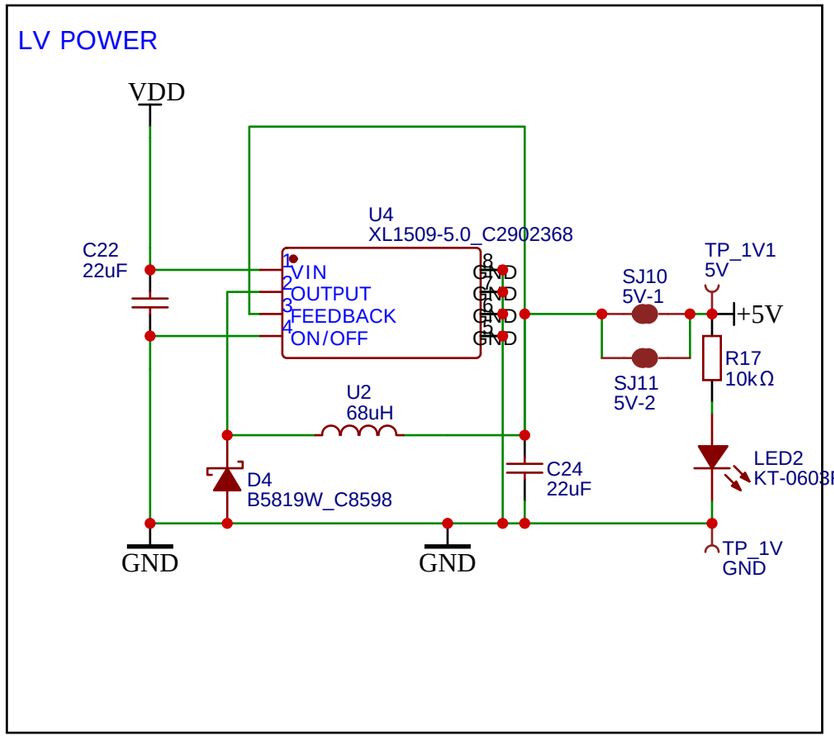


| | |
|---|---|
| TITLE: Louder Raspberry Pi Hat Plus (2X) | REV: F |
| Company: Sonocotta | Sheet: 1/2 |
| Date: 2026-01-26 | Drawn By: andriy@sonocotta.com |

EasyEDA

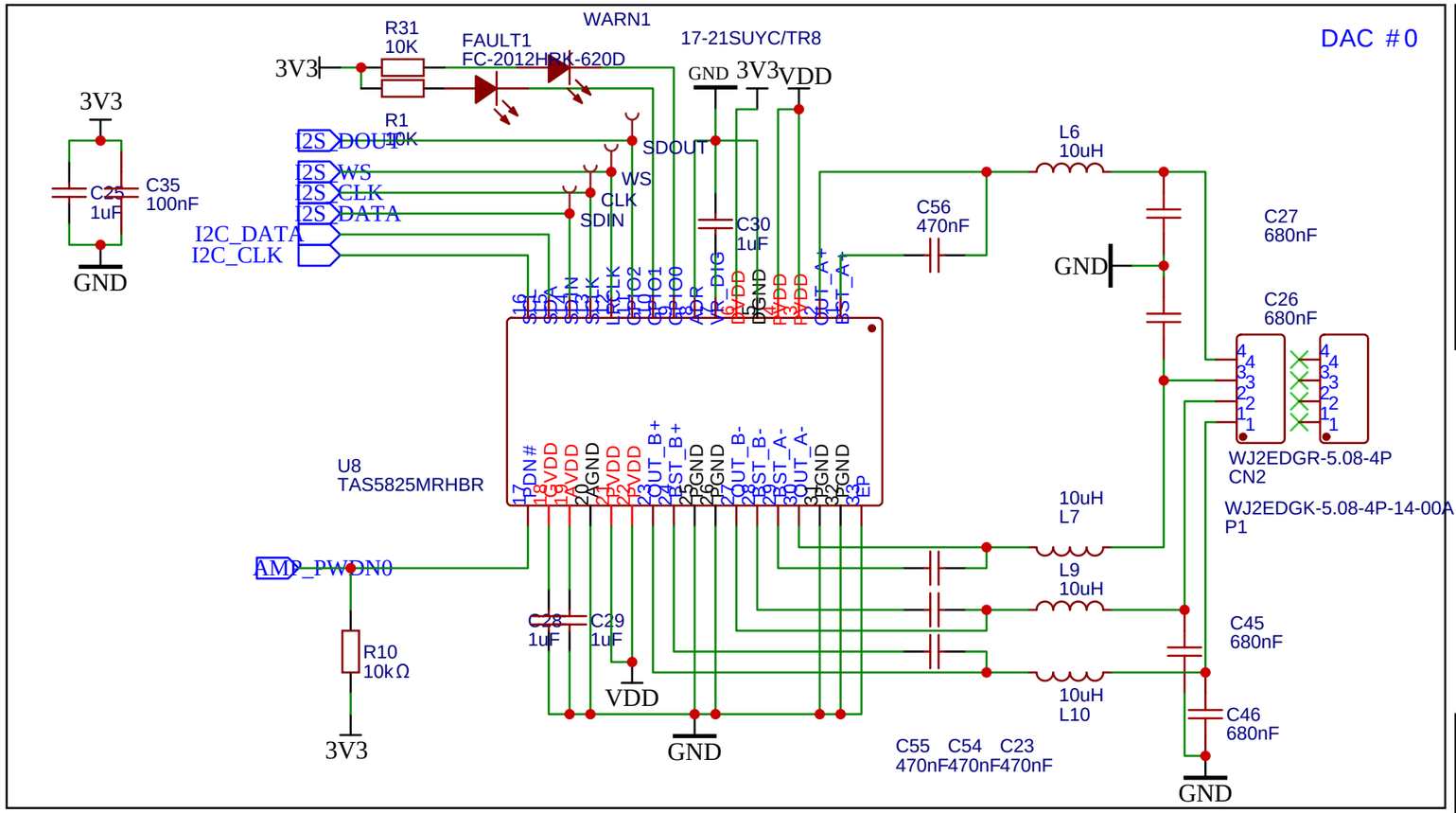


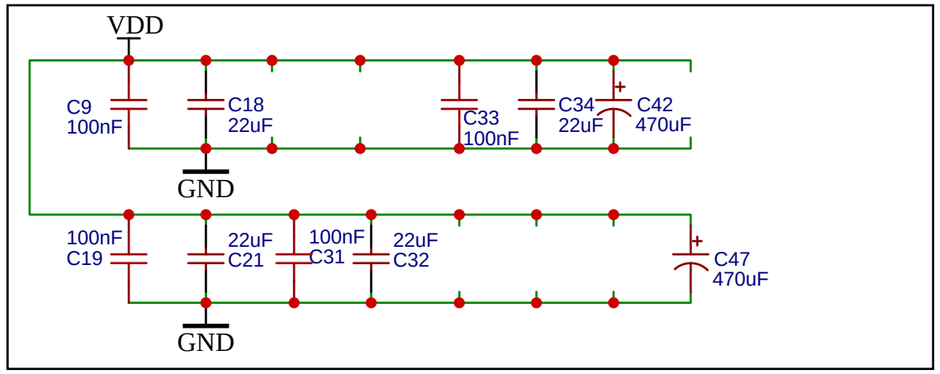


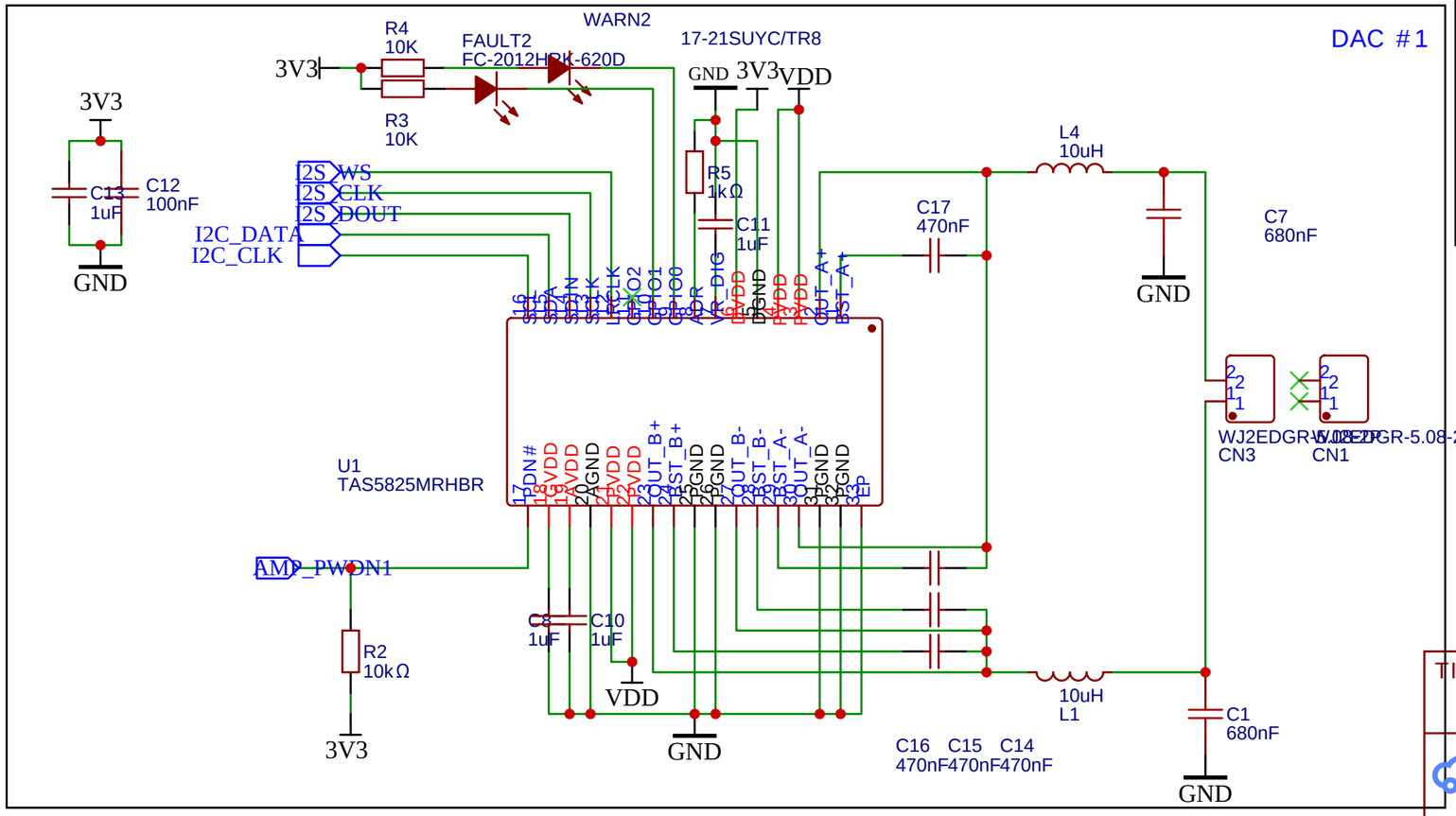


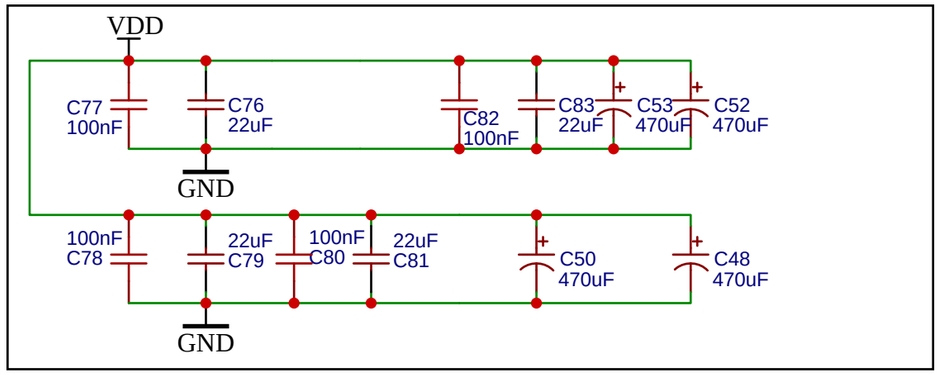


TITLE: Louder Raspberry Pi Hat Plus (2X)

REV: F

Company: Sonocotta

Sheet: 2/2

Date: 2026-01-26

Drawn By: andriy@sonocotta.com